BUILD 2

Quantities shown here are for one unit

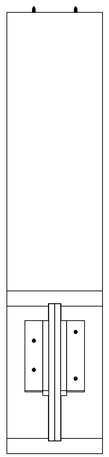

1 TOP
Scale: 2" = 1'-0"

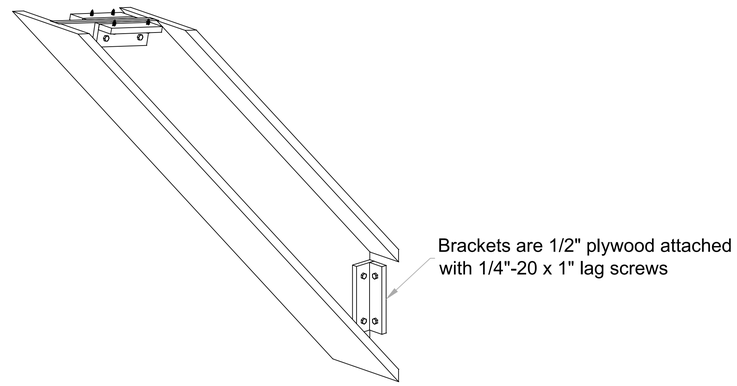

4 FRONT ISO
Scale: NTS

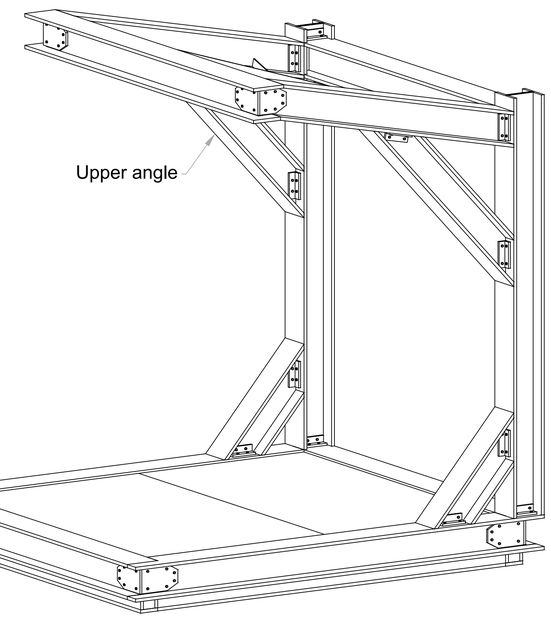

5 ASSEMBLED UNIT - FRONT ISO
Scale: NTS

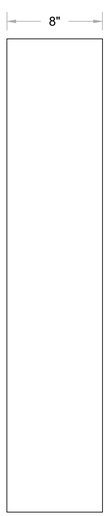

2 FRONT
Scale: 2" = 1'-0"

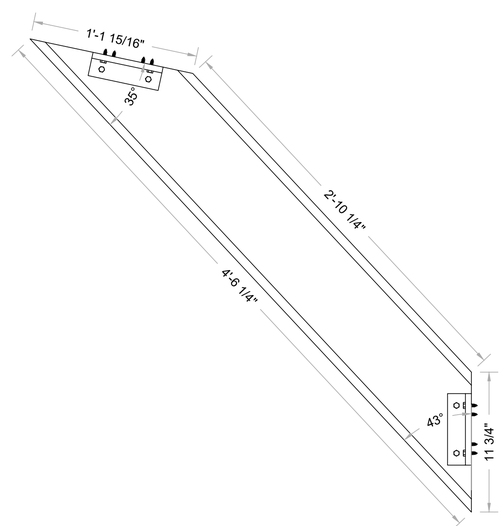

3 RIGHT
Scale: 2" = 1'-0"

Chicago, IL
Jan 13 - Feb 6, 2020

Bridge Unit
I-Beam Angle Structure - Upper Angle

Full Scale: 36"x24" | 50%: 11x17 | Not to Scale: 8.5x11

Drawn by:	Elise Masur
File ID:	D 02
Page:	10 OF 12
Revision #:	02
Plotted:	01/03/20