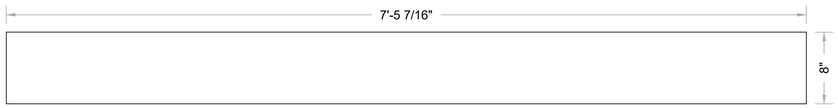

1 TOP
Scale: 1-1/2" = 1'-0"

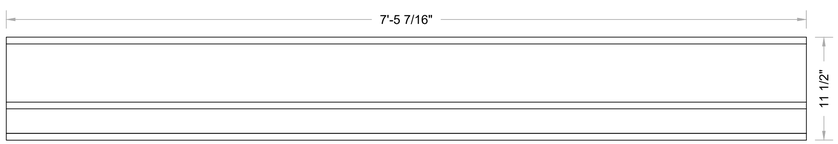

2 FRONT
Scale: 1-1/2" = 1'-0"

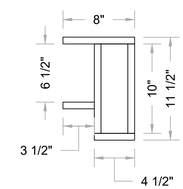

3 RIGHT
Scale: 1-1/2" = 1'-0"

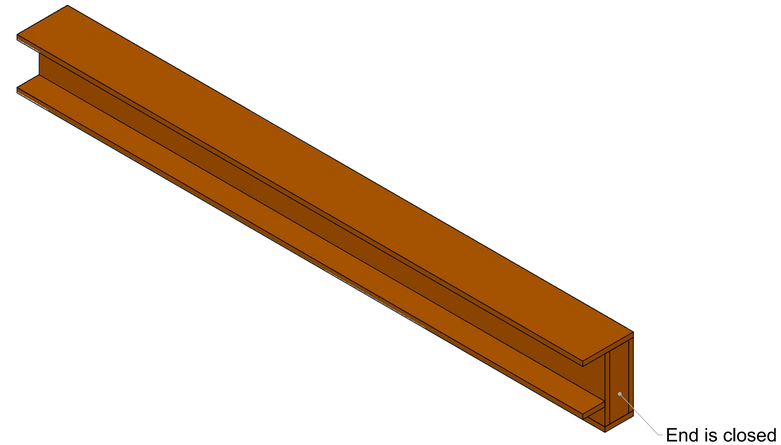

4 FRONT ISO
Scale: NTS

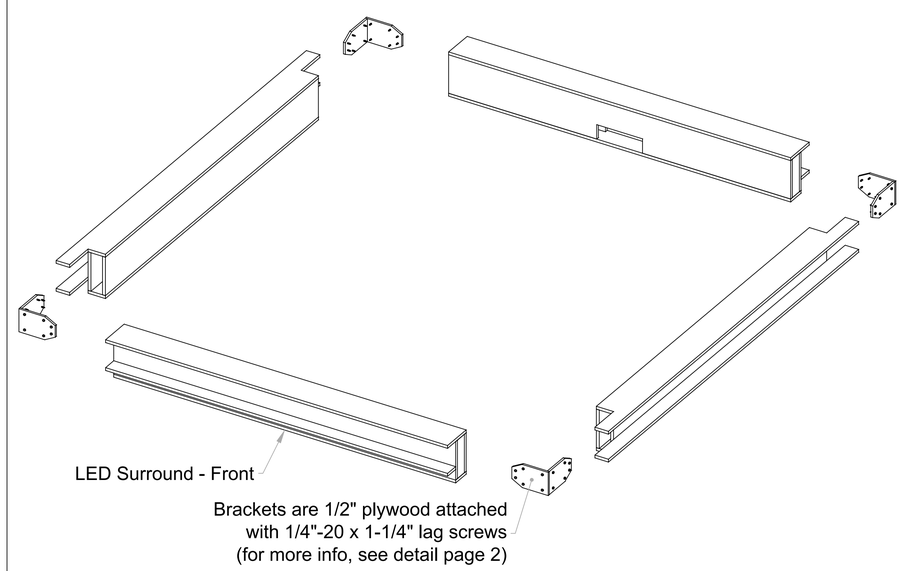

5 SEPARATED ISO VIEW
Scale: NTS

Chicago, IL
Jan 13 - Feb 6, 2020

Bridge Unit
LED Surround - Front

Full Scale: 36"x24" | 50%: 11x17 | Not to Scale: 8.5x11

Drawn by:	Elise Masur
File ID:	D 02
Page:	04 OF 12
Revision #:	02
Plotted:	01/03/20