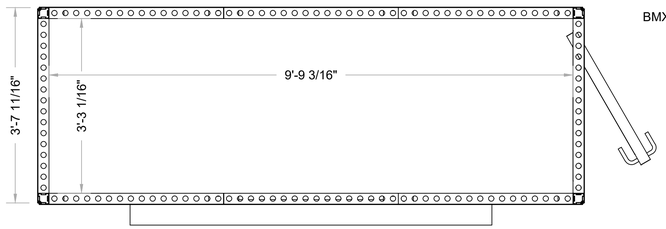

4 TOP
Scale: 3/4" = 1'-0"

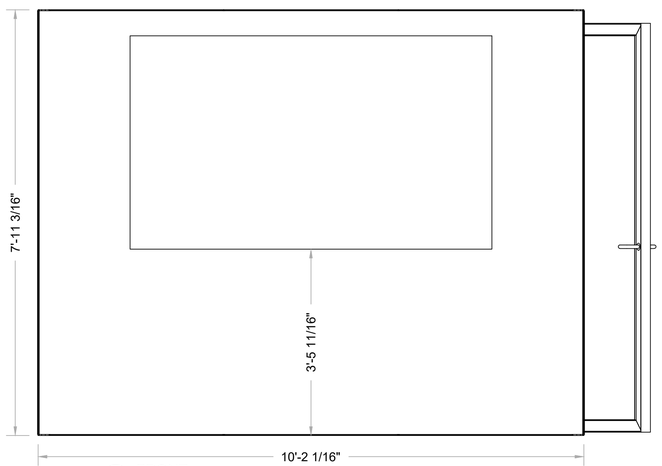

5 FRONT
Scale: 3/4" = 1'-0"

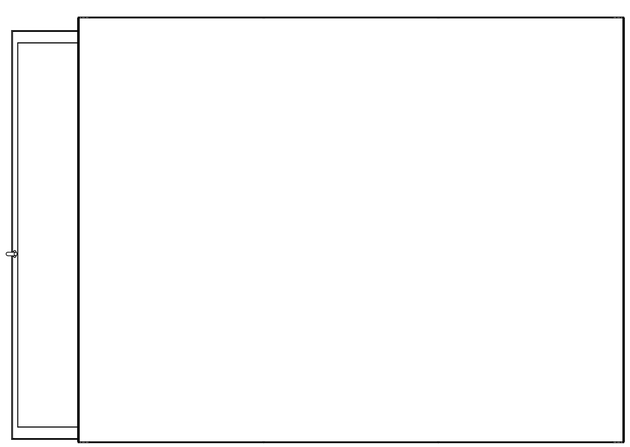

6 BACK
Scale: 3/4" = 1'-0"

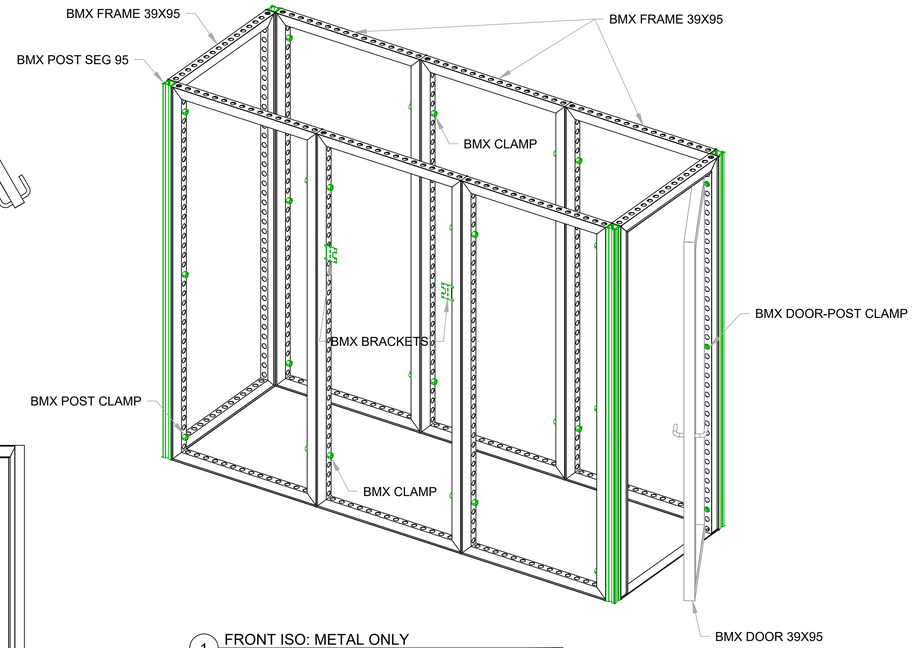

1 FRONT ISO: METAL ONLY
Scale: NTS

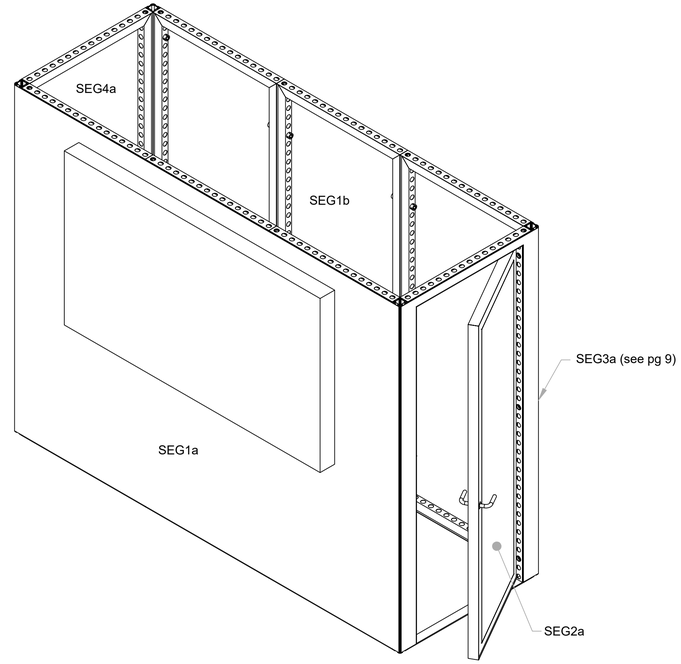

2 FRONT ISO
Scale: NTS

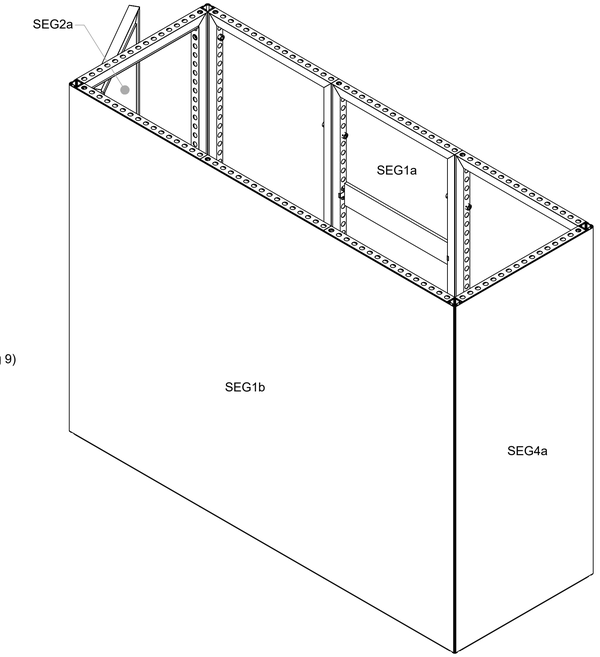

3 REAR ISO
Scale: NTS

No Suffix	Normal panel - 1/8" Sintra	Overlay panels without Panel Hangers applied w/ Velcro-Acrylic #72. - Apply 24 hours before final install for bond to reach full strength. - Other products aren't safe & incurs additional charges for cleaning metal
Suffix b	Banner	
Suffix c	Curved Panel - 1/8" Sintra or Coroplast	
Suffix d	Cabinet Door - 1/4" Sintra	
Suffix o	Overlay Panel - 1/2" unless noted in description	
Suffix r	Routed	Overlay Panels at 8' or higher must mechanically attach to structure
Suffix s	Special - see drawing	

	PANEL ITEMS			
Qty	Part Number	Description	Length	Height
2	SEG1	121.491X94.740	121 1/2"	94 3/4"
1	SEG2	SEG-32.762X91.106	32 3/4"	91 1/8"
1	SEG3	Custom SEG	See pg 9	See pg 9
1	SEG4	SEG-43.380X94.740	43 3/8"	94 3/4"

	ACCESSORY ITEMS			
Qty	Part Number	Description	Length	Width
6	BMX DOOR-POST CLAMP	beMatrix Door-to-Post Clamp	N/A	N/A
8	BMX CLAMP	beMatrix Clamp	N/A	N/A
1	BMX DOOR 39X95	beMatrix Door 39x95	N/A	N/A
7	BMX FRAME 39X95	beMatrix Frame 39x95	N/A	N/A
12	BMX POST CLAMP	beMatrix Post Clamp	N/A	N/A
4	BMX POST SEG 95	beMatrix Corner Post 95 SEG Slots	N/A	N/A
2	BMX BRACKETS	beMatrix mounting brackets	N/A	N/A
1	PLY .75 - 33.5X8	3/4 ply 33.5x8 for beMatrix 39 brackets	N/A	N/A
1	90" MONITOR	Sharp Aquos 90" LC-90 LE745U	80.875"	47.6875"

Orange County Convention Center
Orlando, FL
Oct 4 - 6, 2017

Booth #2339
Monitor Wall Detail

Full Scale: 36"x24" | 50%: 11x17 | Not to Scale: 8.5x11

Drawn by: Elise Masur
File ID: D 01
Page: 08 OF 10
Revision #: 15
Plotted: 09/27/17